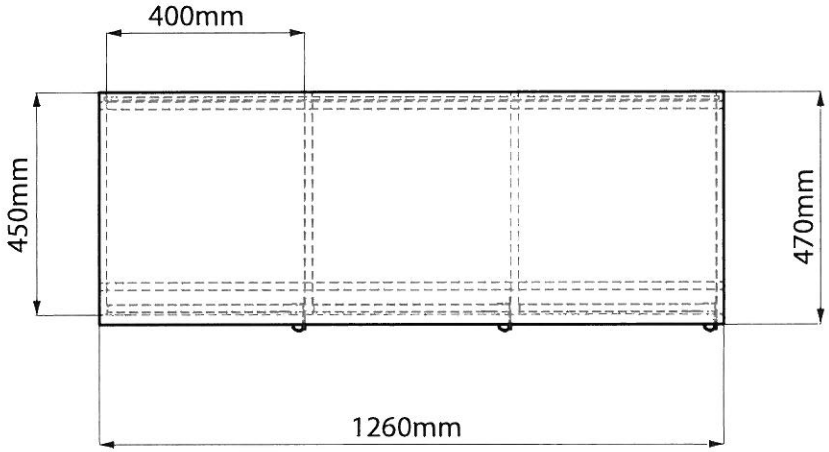
400mm
450mm
470mm
1260mm

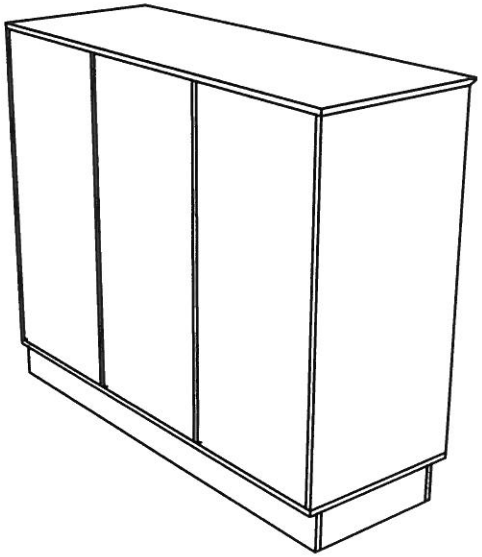

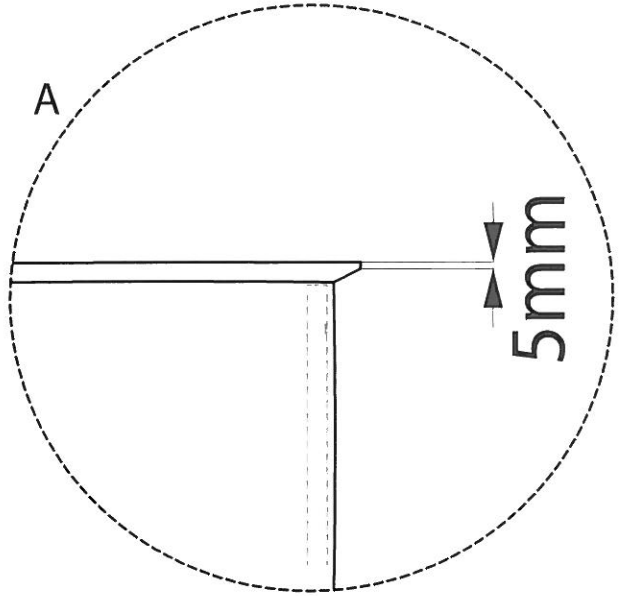
A
5mm

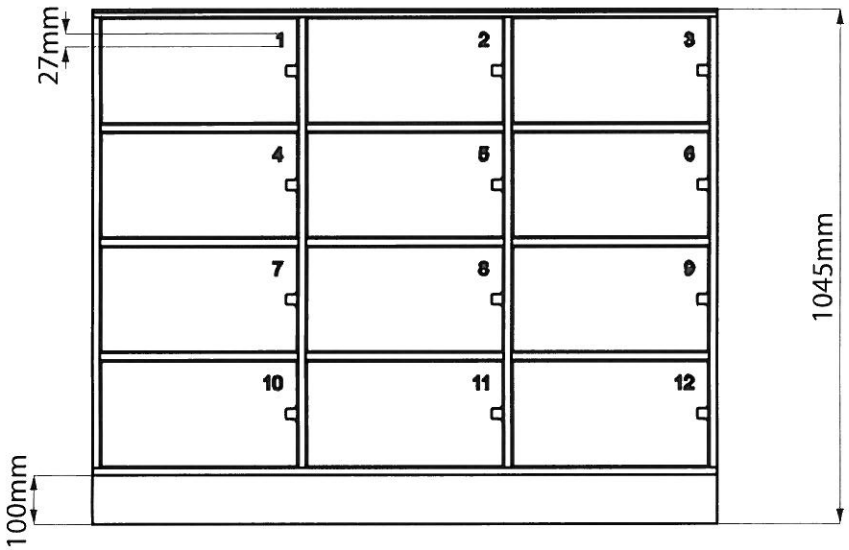
27mm
1
2
3
4
5
6
7
8
9
10
11
12
1045mm
100mm

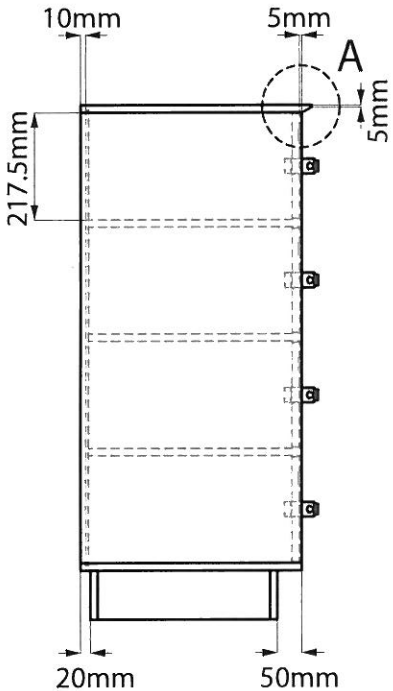
10mm
5mm
A
5mm
217.5mm
20mm
50mm

1
2
3
4
5
6
7
8
9
10
11
12